Intermec

# Getting Started Guide

# ScanPlus 1802 Cordless System

# Quick setup

The ScanPlus Cordless System consists of a base station (MicroBar 9735) and at least one scanner (ScanPlus1802).

**Step 1** Read the Recommendations ..... 3

**Step 2** Choose your connection:

PC Keyboard wedge cable or USB Cable ..... 4

RS-232 C cable ..... 6

**Step 3** Select symbologies for your scanners ..... 8

## If necessary . . .

Return to the default setup ..... 9

Using more than one Cordless System ..... 9

Use the EasySet software for additional setup options ..... 10

Operating your Cordless System ..... 11

Add more scanners to your system ..... 11

Test bar codes ..... 16

# Recommendations

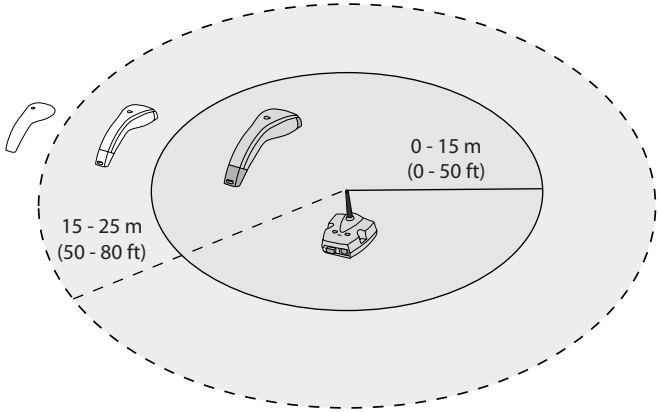


## Recommended

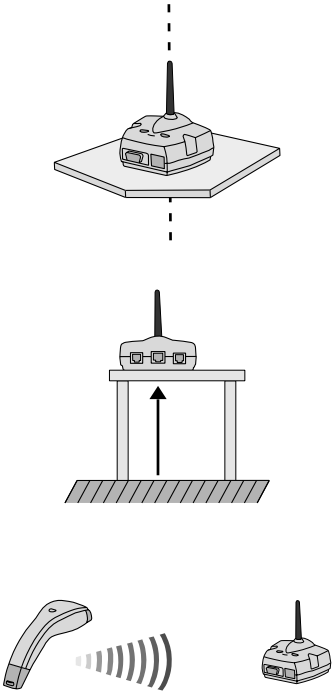

## Not recommended

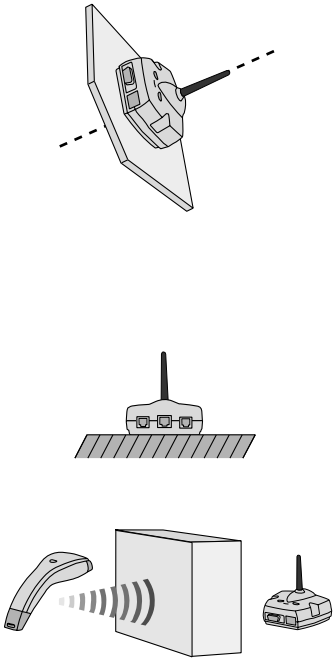

The MicroBar 9735 must not be connected by the RJ connectors to any type of telecommunications circuits.

Step 2

# Keyboard wedge or USB (PC)

Only do this if you are using a Keyboard wedge or a USB cable.

❶ **Recharge battery**

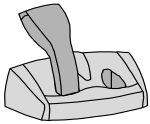

❷ **System power OFF**

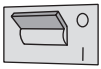

❸ **Connect base station**

**Keyboard wedge cable**

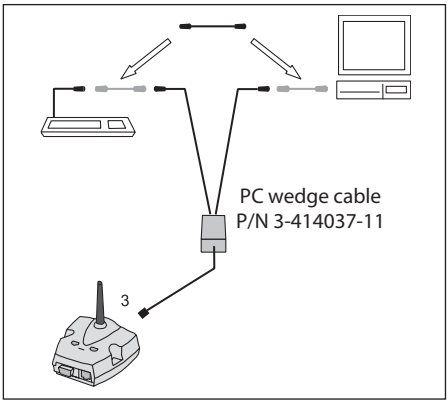


**USB cable**

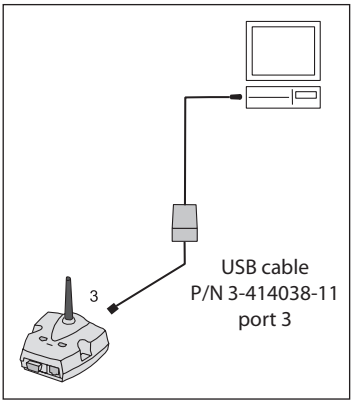


❹ **System power ON**

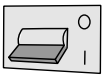

❺ **Associate cordless scanner(s)**

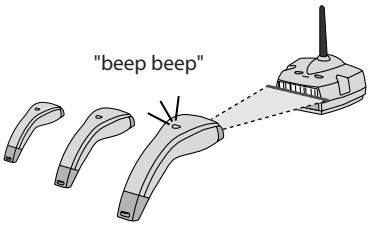

## ❻ Select keyboard

QWERTY English

AZERTY French

QWERTZ German

QWERTY Swedish / Finnish

QWERTY Italian

QWERTY Norwegian

QWERTY Danish

QWERTY Spanish

QWERTZ Swiss / French

QWERTY Portuguese

## ❼ Customize parameters (optional)

(*) = default value

Postamble = Carriage Return

Postamble = Enter (*)

Postamble = none

Postamble = Tab

# RS-232 C

Only do this if you are using an RS-232 C cable.

❶ **Recharge battery**

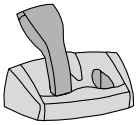

❷ **System power OFF**

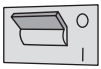

❸ **Connect base station**

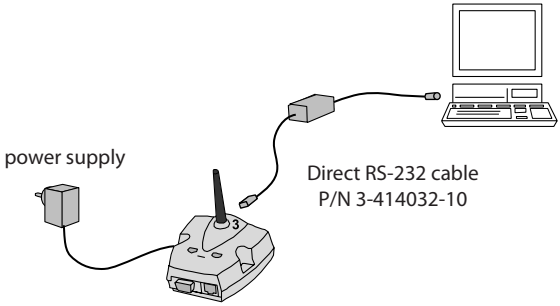


❹ **System power ON**

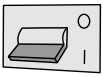

❺ **Associate cordless scanner(s)**

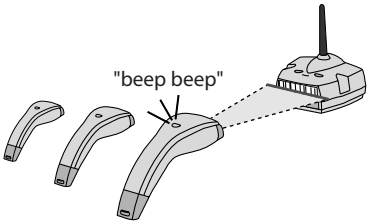


❻ **Read this code (standard RS-232 C PC serial port compatible)**

9600 baud, 7 data bits, even parity, 2 stop bits
postamble = carriage return + line feed

## ❼ Customize parameters (optional)

(*) = default value

9600 baud

19200 baud

7 data bits

8 data bits

Odd parity

Even parity

No parity

Postamble = Carriage Return

Postamble = none

Postamble = Carriage Return + Line Feed (*)

Step 3

# Symbologies

Set symbologies for each cordless scanner.

❶ **Disable all symbologies**

❷ **Select symbology**

Code 39

UPC-A, UPC-E, EAN-8, EAN-13
(UPC-A -> EAN-13)

Code 128 / EAN 128

UPC-A, UPC-E, EAN-8, EAN-13
(UPC-A -> UPC-A)

PDF417

❸ **Use the bar codes on the back cover to test your setup**

# Default setup

# Using more than one Cordless System

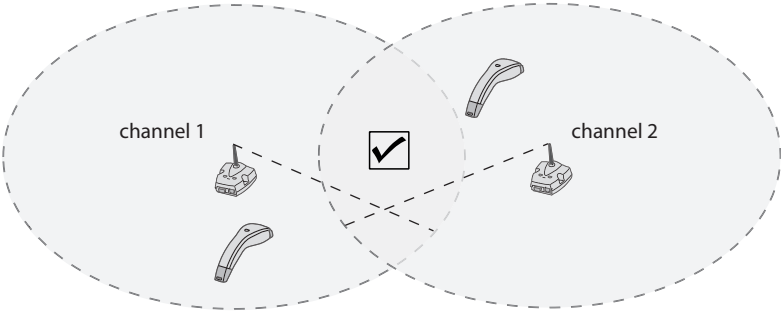


When using more than one cordless system in the same area, we strongly recommend using different channels for optimal performance.

North American version 906MHz - channel 2

European version 433MHz - channel 5

# Full setup with EasySet

❶ **Start the EasySet software**

❷ **Send setup bar codes to the EasySet setup sheet**

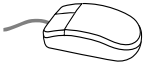

❸ **Print setup sheet**

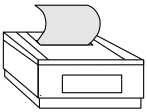

❹ **Connect base station**

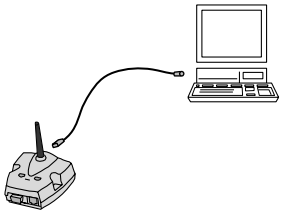

❺ **Associate cordless scanner(s)**

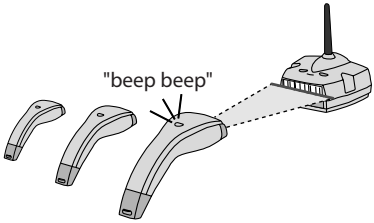


❻ **Read the bar codes on the setup sheet**

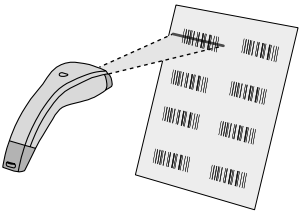

# Operation

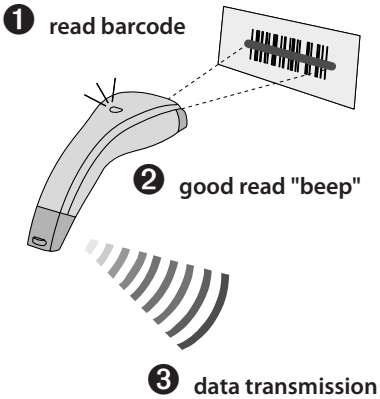


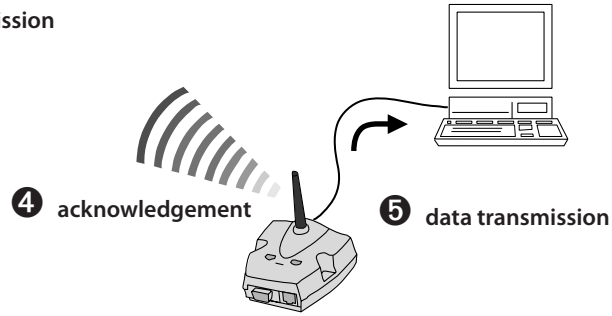


"beep beep beep beep beep beep"

out of range

low battery

# Add more scanners

You can associate more cordless scanners with the base station at any time.

❶ **Read association bar code**

"beep beep"

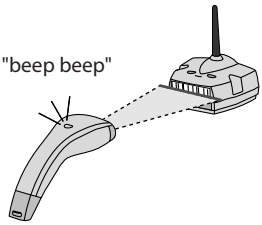

❷ **Set symbologies (see page 8)**

# Regulatory statements

Intermec hereby declares that the ScanPlus 1802 Cordless System has been tested and found compliant with the below listed standards as required by the R&TTE Directive 99/05/EC, EMC Directive 89/336/EEC as amended by 92/31/EEC and by the Low Voltage Directive 73/23/EEC as amended by 93/68/EEC: ETS 300 683, EN 301 489, EN 300 220-1 (1999), EN 60950 and EN 60825-1. This device is TÜV GS licensed (EN 60950 and EN 60825-1) for safety only when powered by an external Intermec power supply. The original Declaration of Conformity is available on demand. The ScanPlus 1802 Cordless System is certified for use in all countries belonging to the European Union.

**USA & Canada:** This device complies with Part 15 of the FCC rules and RSS-210 of Industry Canada. Operation is subject to the following two conditions: (1) this device may not cause harmful interference, and (2) this device must accept any interference received, including interference that may cause undesired operation.

This equipment has been tested and found to comply with the limits for a Class B digital device, pursuant to part 15 of the FCC rules. These limits are designed to provide a reasonable protection against harmful interference in a residential installation. This equipment generates, uses and can radiate radio frequency energy. If not installed and used in accordance with the instructions, it may cause harmful interference to radio communications. However there is no guarantee that interference will not occur in a particular installation. If this equipment does cause harmful interference, the user is encouraged to try to correct the interference by one or more of the following measures: Reorient or relocate the receiving antenna, increase the separation between the equipment and the receiver, connect the equipment into an outlet on a circuit different from that to which the receiver is connected or consult the dealer or an experienced radio/TV technician for help.

In order to maintain compliance with the FCC Rules, the I/O cables that interconnect between the device and any peripheral must be as specified by Intermec.

**Caution**: Changes or modifications not expressly approved by Intermec could void the user's authority to operate this equipment.

This Class B digital apparatus meets all requirements of the Canadian Interference-Causing Equipment Regulations. This device requires a radio license unless it is used totally inside a building (the user must obtain this license).

This device complies with the UL standards (UL1950 / C22.2 n°950).

Cet appareil numérique de la classe B respecte toutes les exigences du Règlement sur le matériel brouilleur du Canada. Cet appareil exige une licence radio à moins d'être entièrement installé dans un bâtiment (l'utilisateur doit obtenir cette licence).

Cet équipement est conforme aux exigences du CNR-210 de Industrie Canada. L'utilisation de ce dispositif est autorisée aux conditions suivantes: (1) il ne doit pas produire de brouillage, et (2) l'utilisateur de l'équipement doit accepter tout brouillage reçu, même si ce brouillage est susceptible de compromettre son fonctionnement.

Cet équipement est conforme aux normes UL (UL1950 / C22.2 n°950).

**Australia-New Zealand:** This equipment has been tested and found to conform to the Australian EMC framework concerning Class B digital devices, prescribed by the Australian and New-Zealand standard AS/NZS 3548.

N309

The information contained in this document is for informational purposes only and is subject to change without notice. No part of this document may be copied or reproduced in any manner without the prior written permission of Intermec Technologies Corporation.

ScanPlus/MicroBar products are covered by patents issued or pending in the USA and other countries.

The word Intermec, the Intermec logo, ScanPlus, MicroBar are either trademarks or registered trademarks of Intermec Technologies Corporation.

EsaySet® is a registered trademark of Intermec Technologies Corporation.

Throughout this document, trademarked names may be used. Rather than put a trademark (™ or ®) symbol in every occurrence of a trademarked name, we state that we are using the names only in an editorial fashion, and to the benefit of the trademark owner, with no intention of infringement.

Class 1 LED product - safe when used in any reasonable operating conditions.

**North America / Asia Pacific / Latin America** • 6001 36th Avenue West, PO Box 4280, Everett, WA 98203-9280
Tel: +1 425 348 2600 • Fax: +1 425 348 2833 • U.S. service and technical support, tel: + 1 800 755 5505 • Canadian service and technical support, tel: + 1 800 668 7043

**Europe / Middle East / Africa** • Sovereign House, Vastern Road, Reading RG1 8BT, England
Tel: +44 118 987 9400 • Fax: +44 118 987 9401

**Internet:** http://www.intermec.com

**E-mail:** info@intermec.com

# Test barcodes

EAN 13

1234567890128

Code 39

CODE-39

UPC-A

0 01234 50000 7

Code 128

CODE-128

PDF417

Intermec Technologies Corporation PDF417

© 2006 Intermec Technologies Corporation All Rights Reserved

Part Number: 3-235049-01 Rev. J