Intermec

Quick Start Guide

CT60 Rugged Tablet PC

Intermec

Quick Start Guide

CT60 Rugged Tablet PC

Intermec Technologies Corporation

Corporate Headquarters
6001 36th Ave. W.
Everett, WA 98203
U.S.A.

Technical Communications Department
550 Second Street SE
Cedar Rapids, IA 52401
U.S.A.

www.intermec.com

The information contained herein is proprietary and is provided solely for the purpose of allowing customers to operate and service Intermec-manufactured equipment and is not to be released, reproduced, or used for any other purpose without written permission of Intermec.

Information and specifications contained in this document are subject to change without prior notice and do not represent a commitment on the part of Intermec Technologies Corporation.

© 2003 by Intermec Technologies Corporation. All rights reserved.

The word Intermec, the Intermec logo, Norand, ArciTech, CrossBar, Data Collection Browser, dcBrowser, Duratherm, EasyCoder, EasyLAN, Enterprise Wireless LAN, EZBuilder, Fingerprint, i-gistics, INCA (under license), InterDriver, Intermec Printer Network Manager, IRL, JANUS, LabelShop, Mobile Framework, MobileLAN, Nor*Ware, Pen*Key, Precision Print, PrintSet, RoutePower, TE 2000, Trakker Antares, UAP, Universal Access Point, and Virtual Wedge are either trademarks or registered trademarks of Intermec Technologies Corporation.

Throughout this manual, trademarked names may be used. Rather than put a trademark (™ or ®) symbol in every occurrence of a trademarked name, we state that we are using the names only in an editorial fashion, and to the benefit of the trademark owner, with no intention of infringement.

There are U.S. and foreign patents pending.

Microsoft, Windows, Windows XP and the Windows logo are registered trademarks of Microsoft Corporation in the United States and/or other countries.

Contents

Before You Begin . . . . . **iii**

1 Introduction 1

CT60 Rugged Tablet PC Description 2

Battery Use and Care 4
How to Install New Batteries 4
When to Recharge Batteries 5
How to Recharge Your Batteries 6

Turning on the CT60 7
Pen Operation 7
Adjusting Pen Settings 8
Pen Alignment 8

About Microsoft Windows XP Tablet Edition 9

Cleaning Your CT60 Tablet PC 10
Case and Display 10
If Your Tablet PC Gets Wet 10

Troubleshooting 11

Before You Begin

This section provides you with safety information, technical support information, and sources for additional product information.

Safety Summary

Your safety is extremely important. Read and follow all warnings and cautions in this document before handling and operating Intermec equipment. You can be seriously injured, and equipment and data can be damaged if you do not follow the safety warnings and cautions.

Do not repair or adjust alone

Do not repair or adjust energized equipment alone under any circumstances. Someone capable of providing first aid must always be present for your safety.

First aid

Always obtain first aid or medical attention immediately after an injury. Never neglect an injury, no matter how slight it seems.

Resuscitation

Begin resuscitation immediately if someone is injured and stops breathing. Any delay could result in death. To work on or near high voltage, you should be familiar with approved industrial first aid methods.

Energized equipment

Never work on energized equipment unless authorized by a responsible authority. Energized electrical equipment is dangerous. Electrical shock from energized equipment can cause death. If you must perform authorized emergency work on energized equipment, be sure that you comply strictly with approved safety regulations.

Safety Icons

This section explains how to identify and understand dangers, warnings, cautions, and notes that are in this guide. You may also see icons that tell you when to follow ESD procedures and when to take special precautions for handling optical parts.

A warning alerts you of an operating procedure, practice, condition, or statement that must be strictly observed to avoid death or serious injury to the persons working on the equipment.

Avertissement: Un avertissement vous avertit d'une procédure de fonctionnement, d'une méthode, d'un état ou d'un rapport qui doit être strictement respecté pour éviter l'occurrence de mort ou de blessures graves aux personnes manupulant l'équipement.

A caution alerts you to an operating procedure, practice, condition, or statement that must be strictly observed to prevent equipment damage or destruction, or corruption or loss of data.

Attention: Une précaution vous avertit d'une procédure de fonctionnement, d'une méthode, d'un état ou d'un rapport qui doit être strictement respecté pour empêcher l'endommagement ou la destruction de l'équipement, ou l'altération ou la perte de données.

Note: Notes either provide extra information about a topic or contain special instructions for handling a particular condition or set of circumstances.

Global Services and Support

Warranty Information

To understand the warranty for your Intermec product, visit the Intermec web site at http://www.intermec.com, click Support, and then click Warranty.

Disclaimer of warranties: The sample code included in this document is presented for reference only. The code does not necessarily represent complete, tested programs. The code is provided "as is with all faults." All warranties are expressly disclaimed, including the implied warranties of merchantability and fitness for a particular purpose.

Web Support

Visit the Intermec web site at http://www.intermec.com to download many of our current manuals in PDF format. To order printed versions of the Intermec manuals, contact your local Intermec representative or distributor.

Visit the Intermec technical knowledge base (Knowledge Central) at http://intermec.custhelp.com to review technical information or to request technical support for your Intermec product.

Telephone Support

These services are available from Intermec Technologies Corporation.

Service	Description	Call 1-800-755-5505 and choose this option
Factory Repair and On-site Repair	Request a return authorization number for authorized service center repair, or request an on-site repair technician.	1
Technical Support	Get technical support on your Intermec product.	2
Service Contract Status	Inquire about an existing contract, renew a contract, or ask invoicing questions.	3
Schedule Site Surveys or Installations	Schedule a site survey, or request a product or system installation.	4
Ordering Products	Talk to sales administration, place an order, or check the status of your order.	5

Who Should Read this Guide?

This guide provides you with information about the features of the CT60, and how to install, operate and maintain it.

Before you configure the CT60, you should be familiar with basic Windows-based PC operation, and how it relates to pen computing.

Related Documents

This table contains a list of related Intermec documents and their part numbers.

Document Title	Part Number
CT Rugged Tablet PC User Guide	961-054-034A
CT60 Vehicle Mount Installation Guide	962-040-012A

The Intermec web site at http://www.intermec.com contains many of our documents that you can download in PDF format.

To order printed versions of the Intermec manuals, contact your local Intermec representative or distributor.

1 Introduction

The CT60 Rugged Tablet PC gives you the power of a desktop computer, yet it is designed for use on foot, in a vehicle, or in an office. It is ideal for highly mobile applications in the most demanding environments.

CT60 Rugged Tablet PC Description

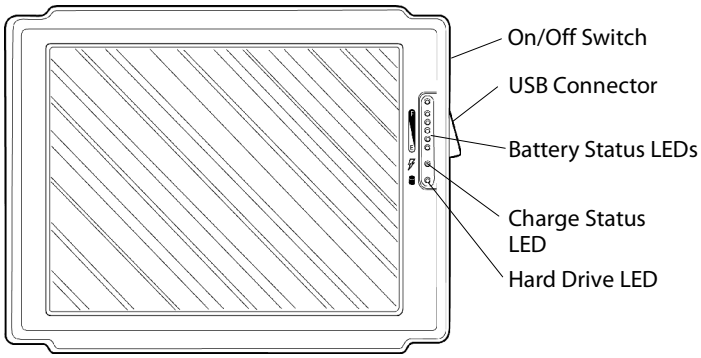

Front View

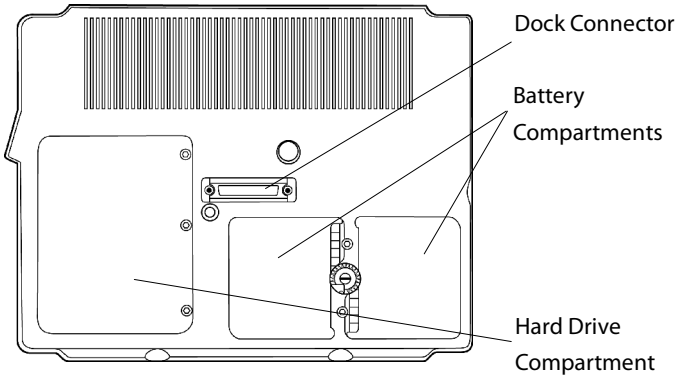

Back View

Your CT60 tablet computer includes the following items:

- CT60 Computer
- Pen stylus
- CT60 Quick Start Guide
- CT60 User's Guide (PDF file on computer)

Most, but not all systems will also include these optional items:

- AC adapter with power cord
- Port replicator or docking station
- Rugged carrying case

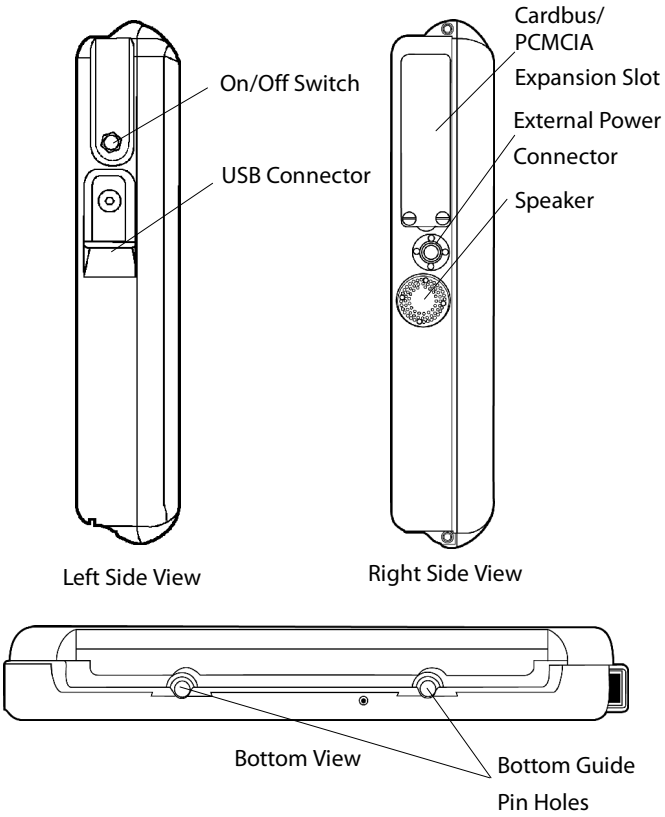

Unpack the CT60 from the shipping box and check to make sure the items shown in the list were included in your shipment. If any item appears to be missing or damaged, contact your Intermec Representative.

Save the CT60 packaging, it might be needed for possible return shipments. The serial number will be on the box and on the bar code label; located on the front of the product. Keep the serial number handy; it will be required should the unit need repairs.

Battery Use and Care

Your computer was shipped with a new factory-installed Li-Ion (lithium-ion) battery. Due to federal regulations regarding battery shipments, they will be partially charged, typically to 30%.

If you do not plan to deploy your computer immediately, be aware that the batteries self-discharge at a slow rate, typically less than 10% per month at normal temperatures.

Note: We recommend that you fully charge your batteries before using them.

How to Install New Batteries

To install or replace a new battery, turn the round knob on the back of the unit. The knob holds the batteries in place and is designed so the batteries cannot be taken out at the same time. Simply turn the knob until the quarter piece exposes the corner of the battery that is to be replaced. A lip on the battery aids for easy removal. Install the new battery by placing it into the compartment and turning the knob to cover the edges of both batteries.

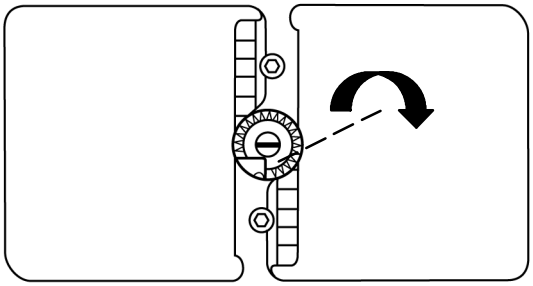

Battery Installation

When to Recharge Batteries

The green LEDs on the upper right front of the unit indicate the power status of the battery. At full charge, all five LED indicators will light a solid green.

Each LED represents approximately 20% of the total charge.

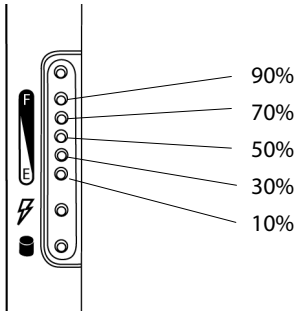

When the LED is Flashing, battery has this percentage of charge left.

As the battery power decreases, the LEDs will turn off from top to bottom. For example, when the top light begins to flash, the computer has approximately 90% charge remaining. If four LEDs are lit a solid green, an estimated 80% of the total battery charge remains. If three are lit, a solid green and the fourth one begins flashing, the computer has approximately 70% charge remaining.

The last LED indicator will begin to flash when approximately 10% of battery power remains. When the remaining battery power becomes critical, all data should be saved. Failure to do so may result in lost data! Replace one of the batteries with a fresh battery or recharge the unit.

When the CT60 is turned off, the battery status indicators will also turn off after a delay of a few seconds. When the unit is placed in standby mode, the battery status indicators will flash as a reminder the unit is on standby.

How to Recharge Your Batteries

The CT60 batteries automatically fast charge any time the CT60 is connected to an external power source (AC or DC). This is accomplished using either the CT60 internal battery charger or an approved Intermec power source/battery charger.

Using the AC Adapter

To recharge the battery using the AC adapter, plug the circular connector of the AC adapter into the AC connector in the CT60 or in the power supply port on the replicator.

Using the Dock

Battery charging begins automatically as the unit is docked when using a vehicle-docking mount, desktop docking station or a wall mount docking station.

The CT60 is fully functional as it charges. Using the unit as it charges will only slightly lengthen the recharging process. The batteries may feel warm to the touch during this process. It is normal for a battery to become warm during charging and discharging.

The CT60 requires at least 14.5 VDC for fast charging.

Warning

Do not use any external power source other than the AC adapters provided with the CT60; permanent damage to the battery or computer may result.

Turning on the CT60

Turn the computer on by quickly depressing the yellow on/off button on the upper right-hand side of the computer (press for ½ to 1 second).

Note: When turning on the computer, *DO NOT* press the **on/off** button twice in rapid succession. A double press replicates <CTRL> <ALT> <DEL> key-strokes. Holding the on/off button down for a longer period of time (4-5 seconds) causes an emergency forced shut down of the computer.

The on/off button is recessed to prevent accidentally turning the computer on or off. The CT60 will perform its self-check routines during the start up process. All units are configured at the factory to automatically boot to the Microsoft Windows Desktop unless a custom configuration has been requested.

Pen Operation

The pen functions like a two-button mouse. There are two switches in the pen, one in the pen tip and another on the barrel of the pen. The tip switch performs the same functions as the left button on a mouse and the barrel switch performs like the right mouse button.

Using the Tip Switch

To activate the tip switch, simply press the tip of the pen against the display. This is similar to clicking the left button of a mouse.

Double-clicking is accomplished by double-tapping with the pen. Move an icon by pressing the pen directly overhead and dragging it to the desired destination, keeping the pen in constant contact with the display.

Note: Tapping the pen requires only light to moderate pressure. It is possible to damage the pen by pounding the tip against the display with force. Most problems using the pen are related to tapping speed and the tapping area size.

Note: The pen is the primary screen navigation and data entry tool for the CT60. *Without a keyboard attached, the pen is the only means of communicating with the computer. Do not lose or misplace the pen*. We recommend that you purchase a spare pen as a backup.

Adjusting Pen Settings

When using XP Tablet PC Edition, attributes related to use of the pen (such as tap speed) can be adjusted by clicking **Control Panel**, **Tablet and Pen Settings**, and then the **Pen Options** tab. You can also improve handwriting recognition accuracy by indicating if you are right or left handed on the Settings tab.

Pen Alignment

If the pen and the cursor are out of alignment, tap **Control Panel**, **Tablet** and **Pen Settings** and go to the Settings tab where you can calibrate the screen for both Landscape and Portrait orientations.

About Microsoft Windows XP Tablet Edition

Your CT60 Tablet PC comes with Microsoft Windows XP pre-loaded.

For more information regarding Windows XP,

go to: http://www.microsoft.com/windowsxp/home/default.asp

For information on Windows XP Tablet PC edition,

go to: http://www.microsoft.com/windowsxp/tabletpc/

Cleaning Your CT60 Tablet PC

Periodic cleaning helps maintain the appearance and reliability of your CT60. When cleaning your CT60, inspect the keyboard, covers, display, connectors, and peripheral products for obvious signs of damage or wear.

Caution

Do not use any abrasive cleaning compounds, ketonic solvents (acetone or ketone), or aromatic solvents (toluene or xylene) to clean any part of your CT60. These solutions will cause permanent damage. Never pour cleaners directly on the display or the case. Instead put the cleanser on a soft cloth and gently wipe the case.

Case and Display

We recommend cleaning the exterior of your CT60 Tablet PC using a soft cloth dampened with MICRO-CLEAN II cleanser, made by Foresight International, Inc. 4887 F Street, Omaha, NE 68127-0205 (phone: 1-800-637-1344).

If Your Tablet PC Gets Wet

Dry off all connectors, keypad, and entire external case before using to avoid component failure and contact problems with docks, charger, and cables.

Troubleshooting

CT60 does not respond to applying power.

Check to ensure that your CT60 Tablet PC is plugged in and that it is making good contact.

CT60 will not turn *on* when the On/Off switch is pressed.

The battery may be low and need recharging.

CT60 won't power up, screen is blank.

1. Battery may be *critically low*.
2. Ensure that your computer has been on a charger for at least five minutes, then remove from the dock and perform the reset procedure. The display will then be active.
3. Continue to charge your Tablet PC for 4 hours to ensure that the battery is fully charged.

CT60 will not turn *on* when placed in a dock.

Ensure that the dock is plugged in and your computer is securely seated in the dock.

CT60 shuts down during operation.

You may have a very low battery, try recharging the battery.

CT60 does not turn *off*.

1. May not turn *off* when it is connected to a charging device.
2. May not turn *off* when it is processing data.
3. If this condition continues for a long period of time it will run down the battery.
4. In the event that your Tablet PC locks up, do a warm reset by pressing the *on/off button*. A double press replicates <CTRL> <ALT> <DEL> keystrokes. If you need to do a cold reset, hold the on/off button down for a longer period of time (4-5 seconds). This causes an emergency forced shut down of the computer.
5. Contact support personnel at 1-800-755-5505 (US and Canada).

Corporate Headquarters
6001 36th Avenue West
Everett, Washington 98203
tel 425.348.2600
fax 425.355.9551
www.intermec.com

CT60 Quick Start Guide J u n e 2003

962-054-066A Rev A