| Charger Specifications | |
|---|---|
| AC Adapter Power | (18V 1.5A) |
| LEDs | Power, Charge |
| Power Consumption | 27W |
| Operating Temperature | 41° to 95° F (5–35C) |
| Storage Temperature | -4° to 140° F (-20–60C) |
| Dimensions | 5.9” x 10.86”x 2.12” (150 x 276 x 54mm) |
| Weight | 2 lbs (917g) AC Adapter and Charge Unit |

| Battery Charge Time | Battery Operating Time |
|---|---|
| Approximately 3–5 hours | Approximately 2.5 to 4 hours |

**WARNING:** **High temperatures will degrade the performance of these batteries. Store ONLY in a cool, dry location.**

**Spent batteries MUST be recycled.**

**Contact local authorities for a nearby battery recycling program.**

® Intermec is a trademark of Intermec Technologies Corporation.
© Copyright 2000 Intermec Technologies Corporation. All rights reserved.

**PN: 962-000-012**
*Revision A*
*December 2000*

*P/N 962-000-012 Revision A*

Intermec
Technologies Corporation

# 6642 EXPANSION BATTERY CHARGER GUIDE

| Packing List | |
|---|---|
| Guide | P/N: 962–000–012 |
| AC Adapter/Charger | P/N: 871–006–030 |
| Charger Unit | P/N: 871–008–060 |
| AC Power Cable | P/N: 871–006–050 |

▶ **NOTE:** *This Battery Charger permits external charging of two Intermec–labeled Lithium–Ion Battery Packs, P/N 317–106–001, rated 11.1 V 3600 mAH only.*

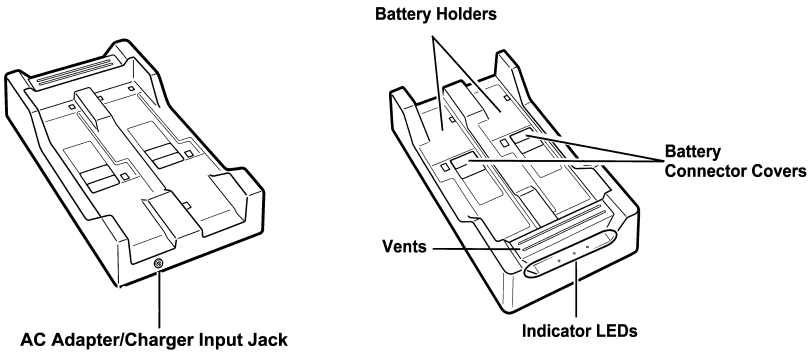


| Charger Indicator LEDs | |
|---|---|
| Power | Green |
| Charge | Orange<br>Flashing (80%)<br>Steady (90%)<br>Green (Fully Charged) |
| Error Condition | Red |

## *Setup–Connecting the AC Adapter/Charger to the Charge Unit*

1. Unpack the unit and follow the steps outlined below.

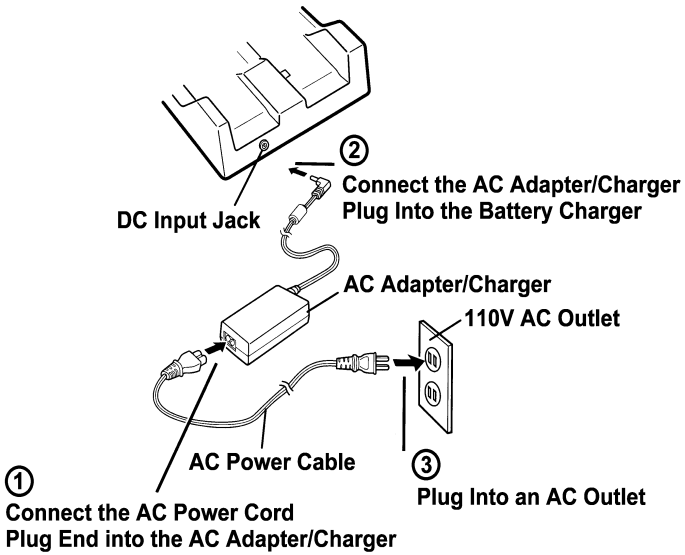


**WARNING:** **Use only the AC Adapter P/N 871-006-030 supplied with the 6642. Use of other AC adapters or AC adapter cords could result in fire or equipment damage.**

## *Battery Insertion*

1. Set the battery lock to the unlocked position on the expansion battery before inserting it into the charger.

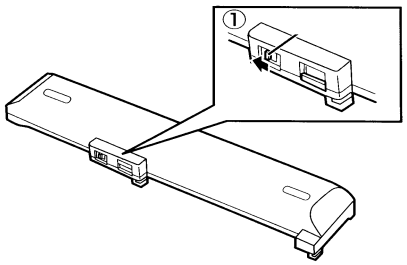


2. Open the battery connector cover on the charging slot.

3. Slide the battery into the slot.

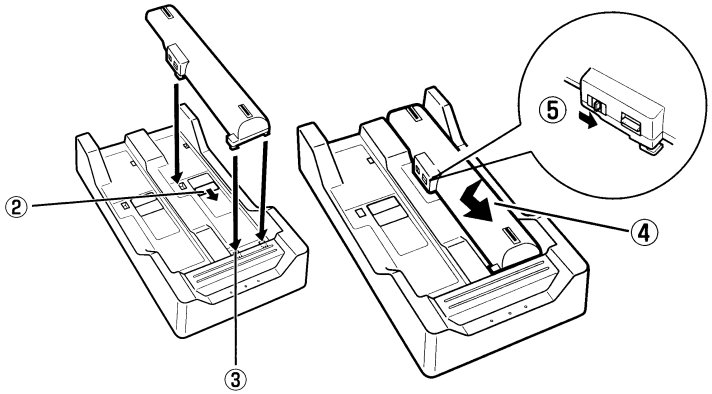


4. Slide the battery downward until it “snaps” in the battery charge slot.

5. Slide the battery lock to the locked position.

▶ **NOTE:** When batteries are charged at different intervals, one battery is fully charged first, then the second battery is charged.

## *Battery Removal*

6. Battery removal is the reverse of installation.

7. When charging is completed, disconnect the AC adapter and the power cord**.**