PRINTHEAD REPLACEMENT

Step-by-Step Instructions

The quick-mount thermal printhead is designed to be easy to replace. Proceed as follows:

- ❑ Turn off the printer.
- ❑ Open the right-hand door and the front flap. (In case of cutter-equipped printer, tilt the cutter forward).
- ❑ Loosen the knurled screw at the centre of the printhead bracket.
- ❑ Lift the printhead by turning the printhead lift handle counter-clockwise (forward) and remove the web from the print mechanism.
- ❑ Pull out the printhead as far as the cable allows and disconnect the cable to the printhead by carefully pulling at the connector (not at the cable itself).

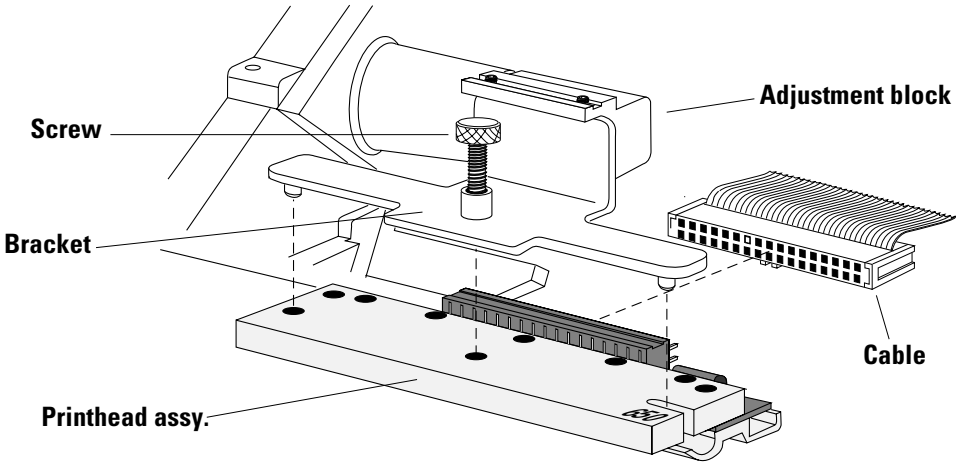

Illustration shows an 8 dots/mm printhead.

- ❑ Connect the cable to the new printhead assembly. It will only fit easily in one way. Do not use excessive force!
- ❑ Put the new printhead under the bracket so the cable runs behind the printhead adjustment block.

  Note! You cannot replace a 6 dots/mm printhead with an 8 dots/mm printhead or vice versa, since they use different brackets and cables.
- ❑ Fasten the printhead assy. with the knurled screw, making sure that the guide pins in the bracket fits into the corresponding slots in the printhead adapter plate.

1-960352-01
EasyCoder 201 II
Printhead Replacement Instructions
Edition 2, September 1998

Continued!

PRINTHEAD REPLACEMENT, cont'd.

Step-by-Step Instructions, cont'd.

- ❑ Load the paper supply and lower the printhead into locked position.
- ❑ Close the front flap and side door.
- ❑ Turn on the power. The printer will automatically reset itself to the characteristics of the printhead in regard of head resistance and density. If possible, print a series of test labels to make sure that the new printhead is OK.
- ❑ Before operation is resumed, at least two paper feed operations should be performed to allow the printer to adjust its feed mechanism.

Information in this manual is subject to change without prior notice and does not represent a commitment on the part of Intermec Printer AB.

© Copyright Intermec PTC AB, 1998. All rights reserved. Published in Sweden.

EasyCoder is a registered trademark of Intermec Technologies Corp.