Printer Cart Dock Instructions

Use the cart dock (P/N 943-129-001) to easily attach the PB50 or PB51 printer to a movable cart. You can also use the cart dock to set the printer on a flat surface. The cart dock kit contains these parts:

- Cart dock accessory
- Four self-tapping screws
- Four bolts and nuts
- This instruction sheet

Note: You must have the belt clip installed on the printer to use the cart dock. The belt clip (P/N 825-191-001) secures the printer to the cart dock accessory.

If you are going to use fanfold media with the printer and cart dock, you need to cut a slot in the cart for the media to feed through before you install the cart dock.

To install the cart dock on a cart

1 Using the cart dock as a template, mark the two adjustable drill holes on your mounting surface.

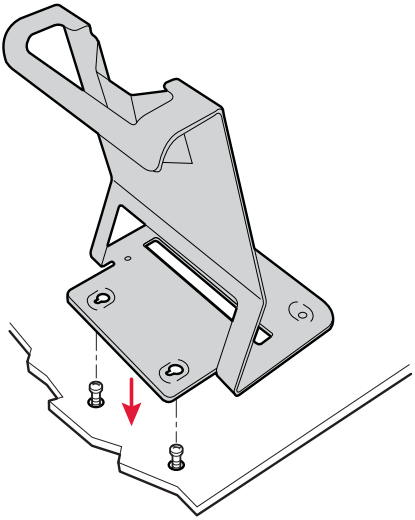

2 Insert two screws into the mounting surface until there is approximately 0.25 inch (0.63 cm) of the screw remaining above the surface.

3 Place the cart dock over the two screws and adjust the cart dock over the slot in the cart or surface, until it is in the desired position. Tighten the two screws until the cart dock is firmly held in place.

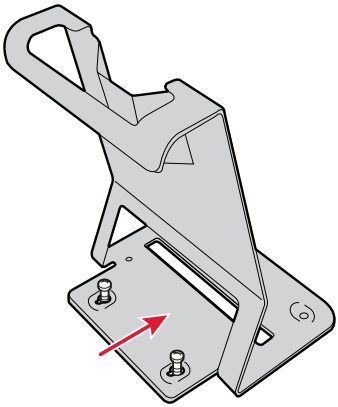

4 Insert the remaining two screws in the other holes on the cart dock and tighten.

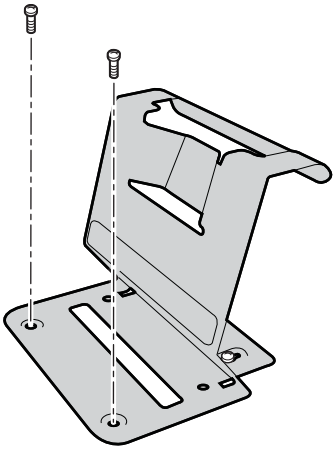

5 Install the printer onto the cart dock by lifting up on the belt clip and sliding it over the cart dock as shown below. You are now ready to print using the cart dock.

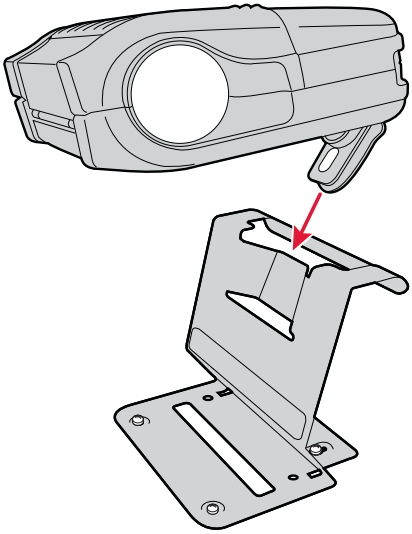

To load fanfold media with the cart dock

1 Feed the media up through the slot in the cart and feed it through the slot in the back of the printer.

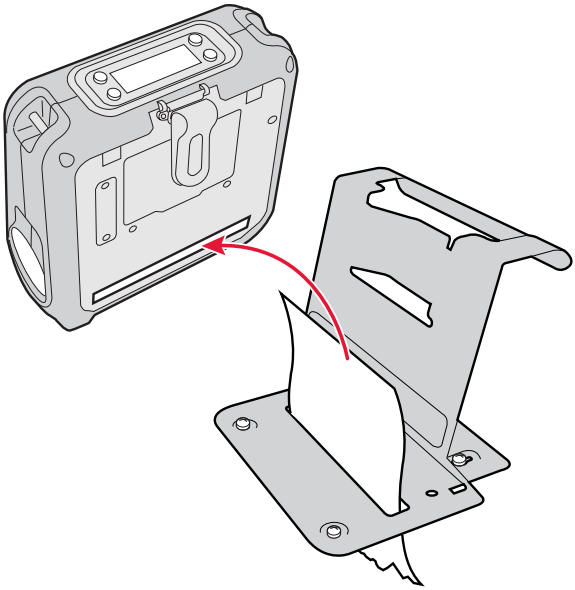

2 Pull enough media through the slot so that it feeds out about 3 inches (7.62 cm) from the printer.

3 Close the media cover.

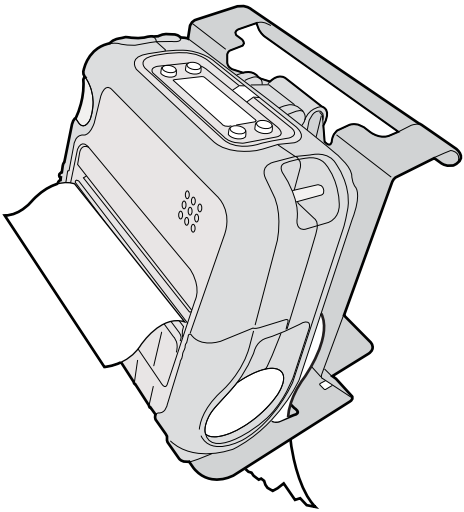

You are now ready to print using the cart dock and fanfold media.

Intermec

Worldwide Headquarters
6001 36th Avenue West
Everett, Washington 98203
U.S.A.

tel 425.348.2600

fax 425.355.9551

www.intermec.com

© 2009 Intermec Technologies Corporation. All rights reserved.

Printer Cart Dock Instructions

P/N 943-129-002