2102 Cubicle Bracket Instruction Sheet

This instruction sheet explains how to mount the 2102 Universal Access Point™ (UAP) using the 2102 cubicle bracket kit (Part No. 070366). You use the 2102 cubicle bracket in combination with the mounting bracket that ships with the UAP.

To mount the UAP using the cubicle bracket

1. Position the cubicle bracket above the mounting bracket as shown. Slide the cubicle bracket down until it seats in the mounting bracket.

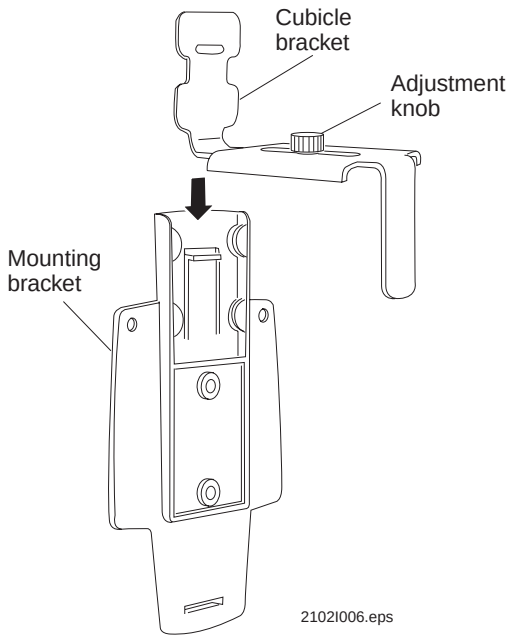

2. Hang the cubicle bracket over the top of a cubicle wall. Adjust the bracket so it fits securely and then tighten the adjustment knob.

2102 Cubicle Bracket Instruction Sheet

This instruction sheet explains how to mount the 2102 Universal Access Point™ (UAP) using the 2102 cubicle bracket kit (Part No. 070366). You use the 2102 cubicle bracket in combination with the mounting bracket that ships with the UAP.

To mount the UAP using the cubicle bracket

1. Position the cubicle bracket above the mounting bracket as shown. Slide the cubicle bracket down until it seats in the mounting bracket.

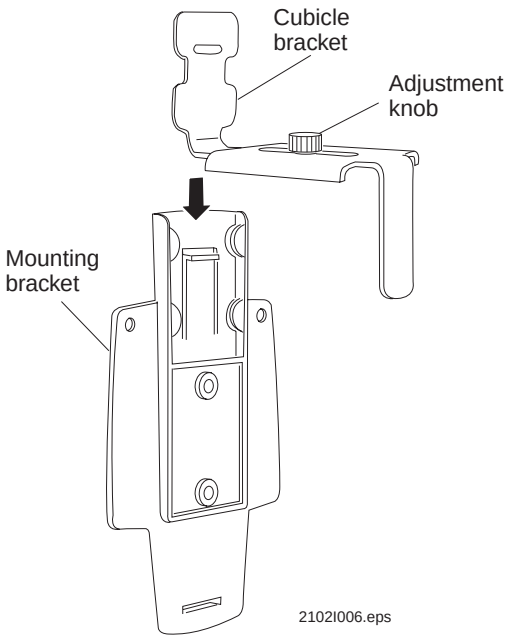

2. Hang the cubicle bracket over the top of a cubicle wall. Adjust the bracket so it fits securely and then tighten the adjustment knob.

3. To install the UAP in the mounting bracket, insert the hooks on the bracket into the slots on the UAP.

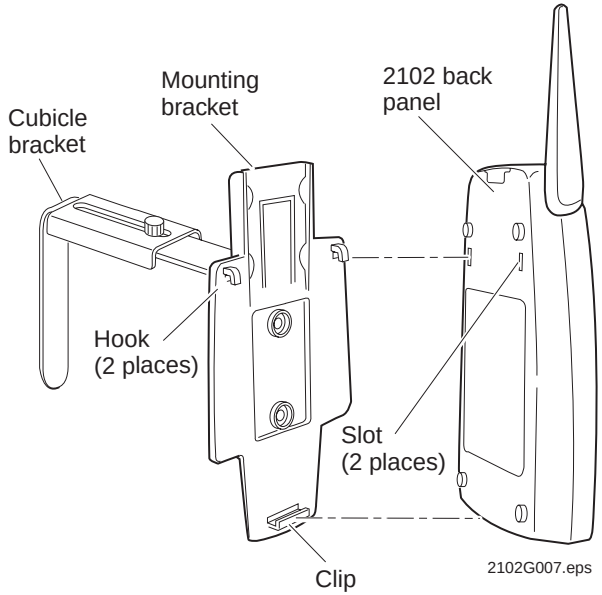

4. While holding the brackets in place, slide the UAP up slightly and then press on the base of the UAP until it clicks into the clip on the base of the mounting bracket.

You have completed the installation of the 2102 cubicle bracket.

Part No. 070440-001

070440-001

Intermec
Technologies Corporation

6001 36th Avenue West
P.O. Box 4280
Everett, WA 98203-9280

© 2000 Intermec
All Rights Reserved

3. To install the UAP in the mounting bracket, insert the hooks on the bracket into the slots on the UAP.

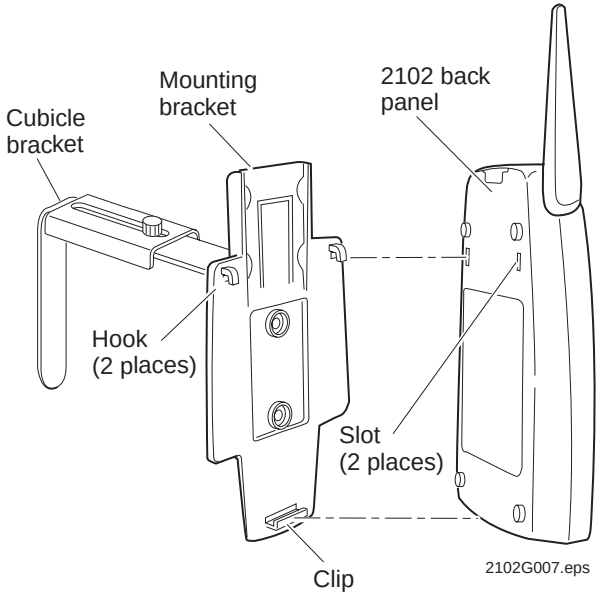

4. While holding the brackets in place, slide the UAP up slightly and then press on the base of the UAP until it clicks into the clip on the base of the mounting bracket.

You have completed the installation of the 2102 cubicle bracket.

Part No. 070440-001

070440-001

Intermec
Technologies Corporation

6001 36th Avenue West
P.O. Box 4280
Everett, WA 98203-9280

© 2000 Intermec
All Rights Reserved