3600 Media Post Shim

Instruction Sheet

The following instructions explain how to install a 3600 media post shim (Intermec P/N 063506-001) into a 3600 printer.

Parts Provided:
- Media post shim
- Extra screws

Tools Required:
- #1 Phillips screwdriver

Step 1
Remove the media supply cap

1. Remove the media cover and rotate the head lift lever clockwise to release the printhead (refer to your 3600 *Bar Code Label Printer Getting Started Guide*, Intermec P/N 062733).
2. Remove the media from the media supply post.
3. Remove the four Phillips mounting screws securing the media supply cap to the media supply post. Keep the screws, cap, and the supply roll retainer.

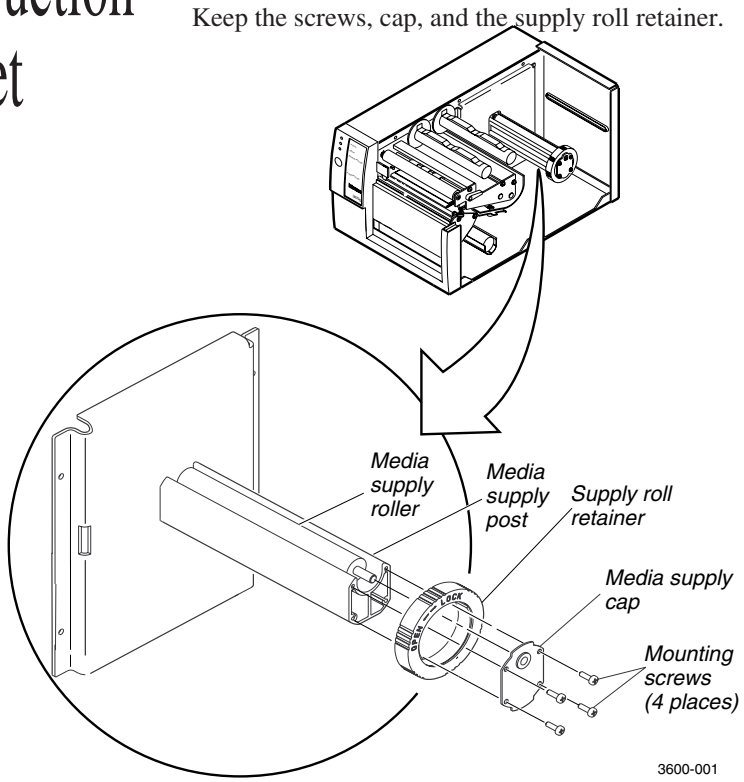

Step 2
Install the media post shim

1. With the supply roll retainer installed on the media supply post, position the media post shim between the media supply cap and the media supply post.
2. Insert the media supply roller in the media supply cap and secure the parts with the mounting screws removed in Step 4 (or the extra screws provided).
3. Load the media and rotate the head lift lever counterclockwise to lock the printhead in place.
4. Feed or print labels as required to test the media fit (refer to your *3600 Bar Code Label Printer Getting Started Guide*, Intermec P/N 062733).
5. Install the media cover.

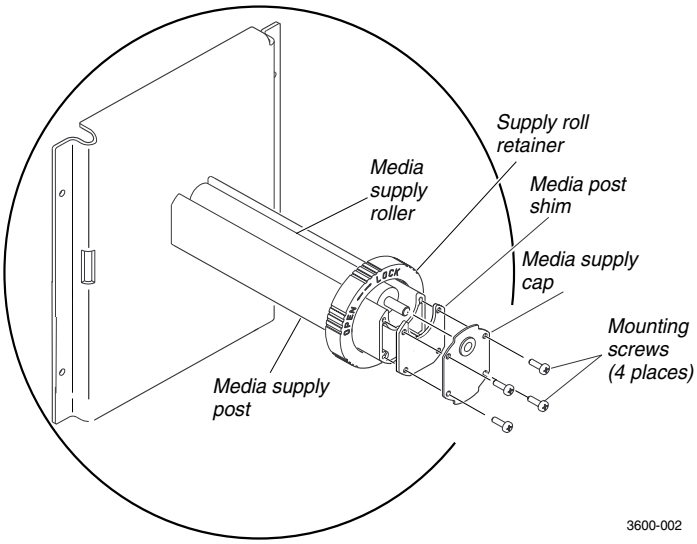

Intermec

Intermec Corporation
6001 36th Avenue West
P.O. Box 4280
Everett, WA 98203-9280
P/N 063823-001